WINSTA® MIDI

Sockets and Plugs, 5-Pole

	2 x 0.5 – 4 mm² ❶ 400 V/6 kV/3 I_N 25 A | 2 x AWG 20 – 12 9 mm / 0.35 in ❷ Approvals	2 x 0.5 – 4 mm² ❶ 400 V/6 kV/3 I_N 25 A | 2 x AWG 20 – 12 9 mm / 0.35 in ❷ Approvals

Description	Color	Item No.	Pack. Unit	Color	Item No.	Pack. Unit
Pluggable connectors, 5-pole, with CAGE CLAMP®S connection	**Socket with strain relief housing,** for 2 cables, 9 – 13 mm diameter ❸			**Plug with strain relief housing,** for 2 cables, 9 – 13 mm diameter ❸		
	● black	**770-105**	25	● black	**770-115**	25
	○ white	**770-125**	25	○ white	**770-135**	25
Item-Specific Accessories						
	Lockout cap, for socket, separable, 12-pole			**Lockout cap,** for plug, separable, 5-pole		
	black	**770-201**	100	yellow	**770-360**	100
	white	**770-221**	100			
				Coding pin, for plug (A and B coding)		
				gray	**770-401**	100
Accessories, 770 Series						
	Locking lever, for "flying leads,"			**Locking lever,** for "flying leads,"		
	manually operated			tool operated		
	black	**770-101**	100 (4x25)	black	**770-111**	100 (4x25)
	white	**770-121**	100 (4x25)	white	**770-131**	100 (4x25)
	Marker, for manual marking					
	white	**770-450**	50			
Info	**Dimensions**					

❶ Conductor sizes: 0.5 – 4 mm² "s + f-st"
0.5 – 2.5 mm² "stranded"

❷ For "International Certification Organizations" and "Approvals – User Guide," see pages 240 to 243.

❸ For more strain relief housings, see pages 118 and 119.

● black	Coding A	(N 3 L1 L2 L3)
○ white	Coding A	(N 3 L1 L2 L3)
● blue	Coding I,	(N ⏚ L DA- DA+)
● dark gray	Coding L	(N 3 L N′ L′)
● red	Coding P	(N 3 L1 L2 L3)
● green	Coding Q	(N PE1 PE2 PE3 L)
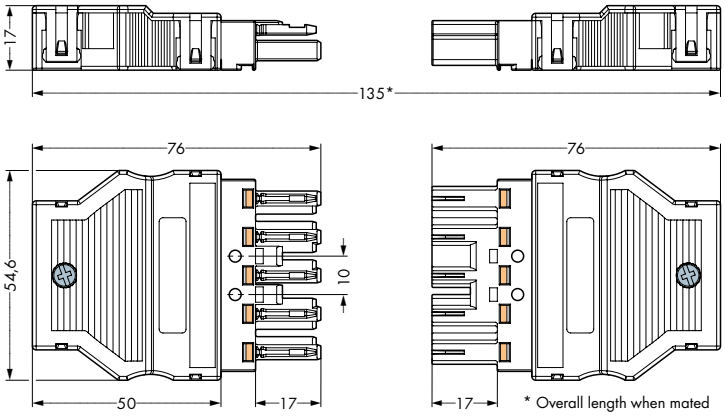
For coding information, see pages 224 to 226.
Fire load data available upon request.